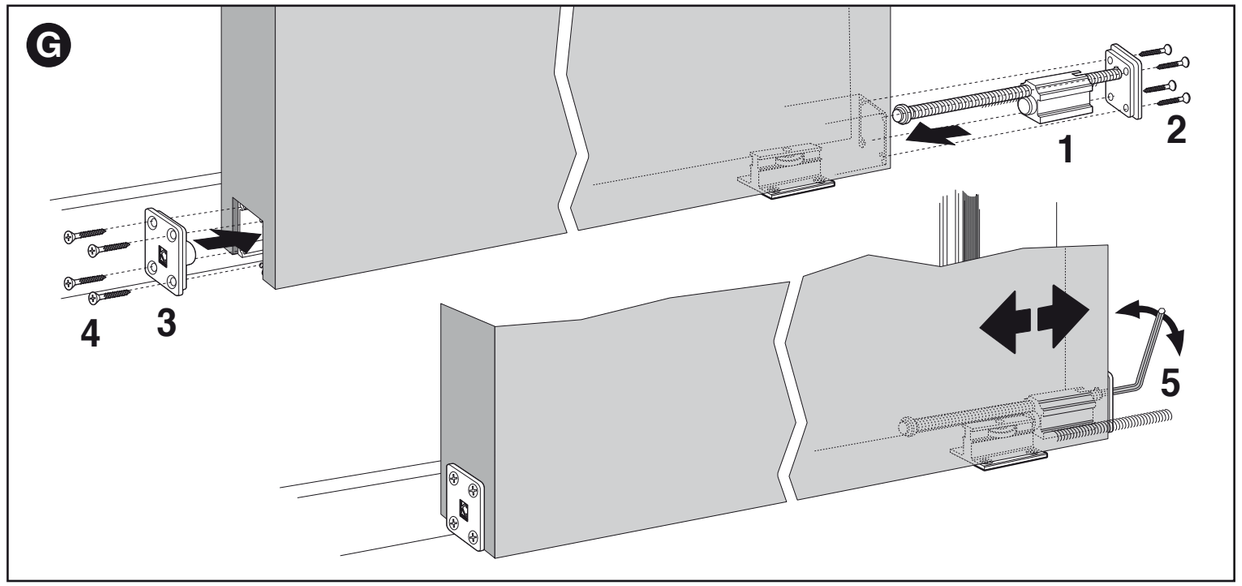

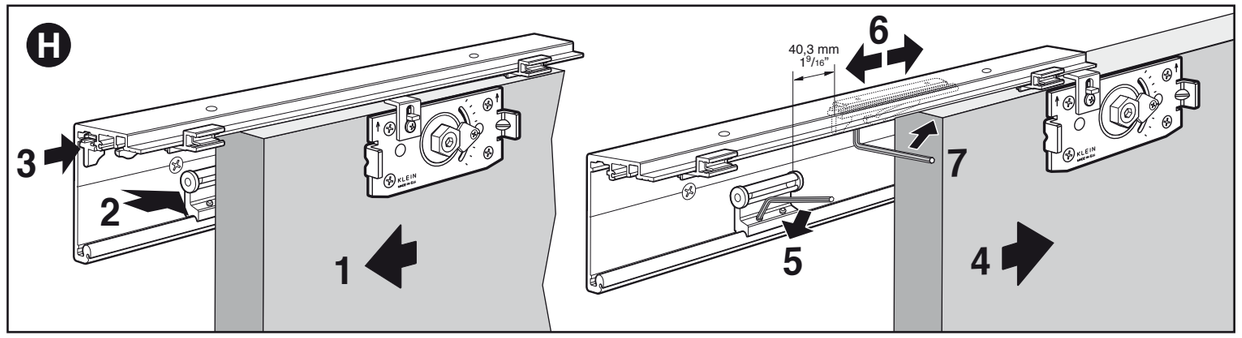

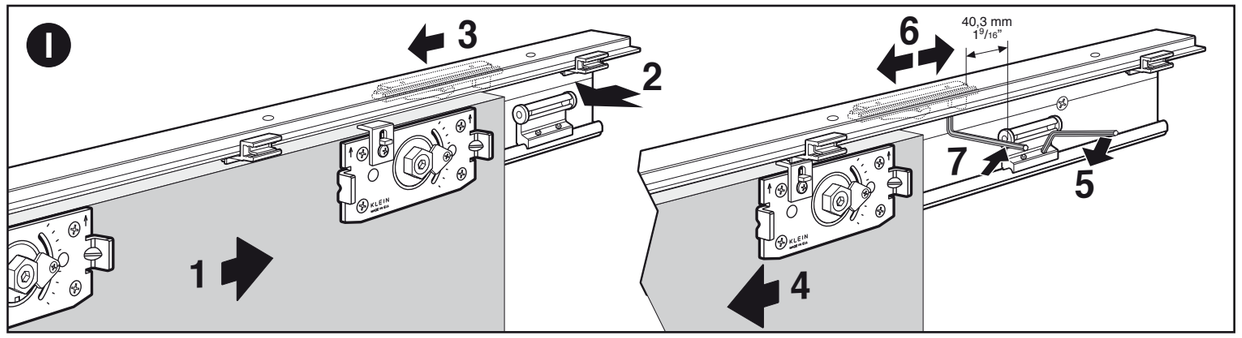

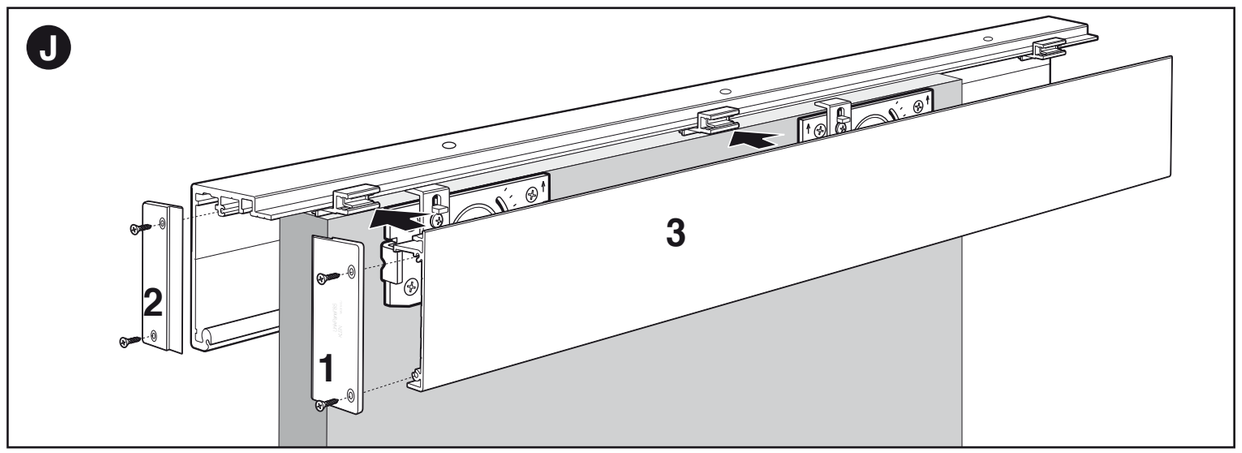

KLEIN®

Instrucciones / Instructions / Anweisungen / Instructions

UNIKPANEL® 85

KLEIN EUROPE
Edificio KLEIN
Polígono Industrial Can Cuyás, N-150 Km.1
08110 Montcada i Reixac (Barcelona-Spain)
Tel.: (+34) 935 751 010
Fax: (+34) 935 760 109

+INFO
www.klein-europe.com

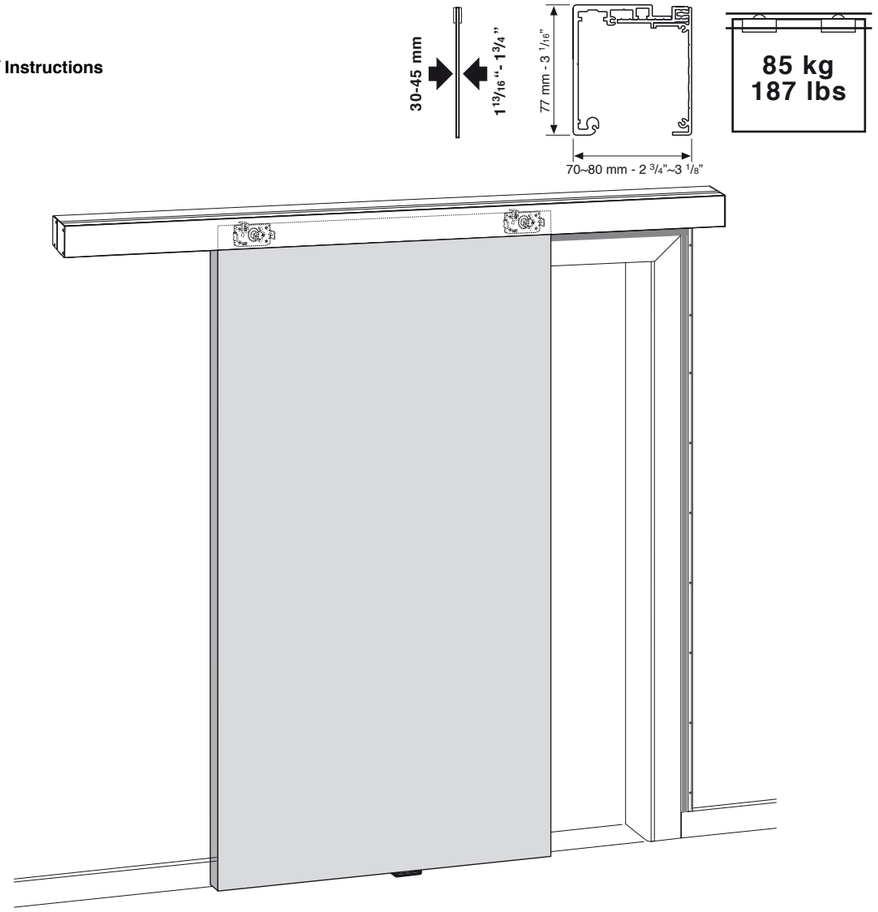

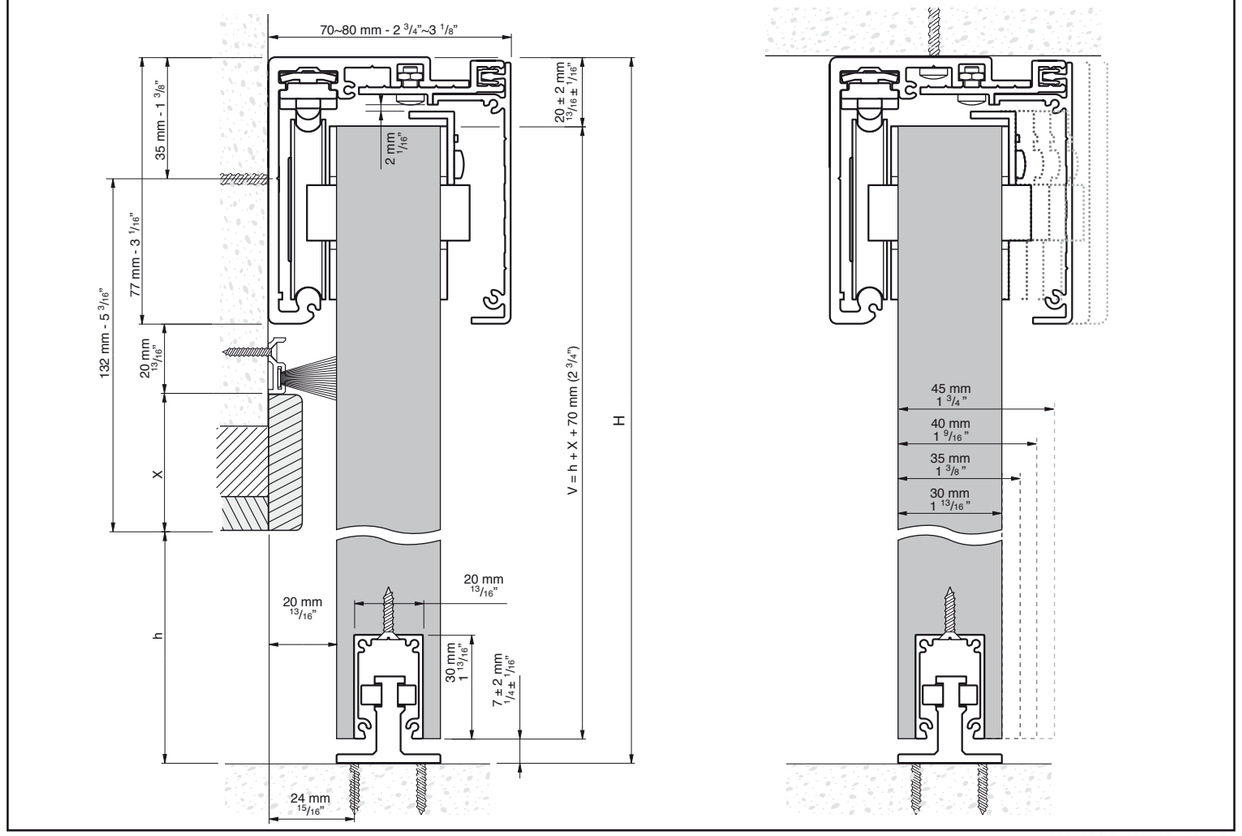

411-2892 05-11 PK-11

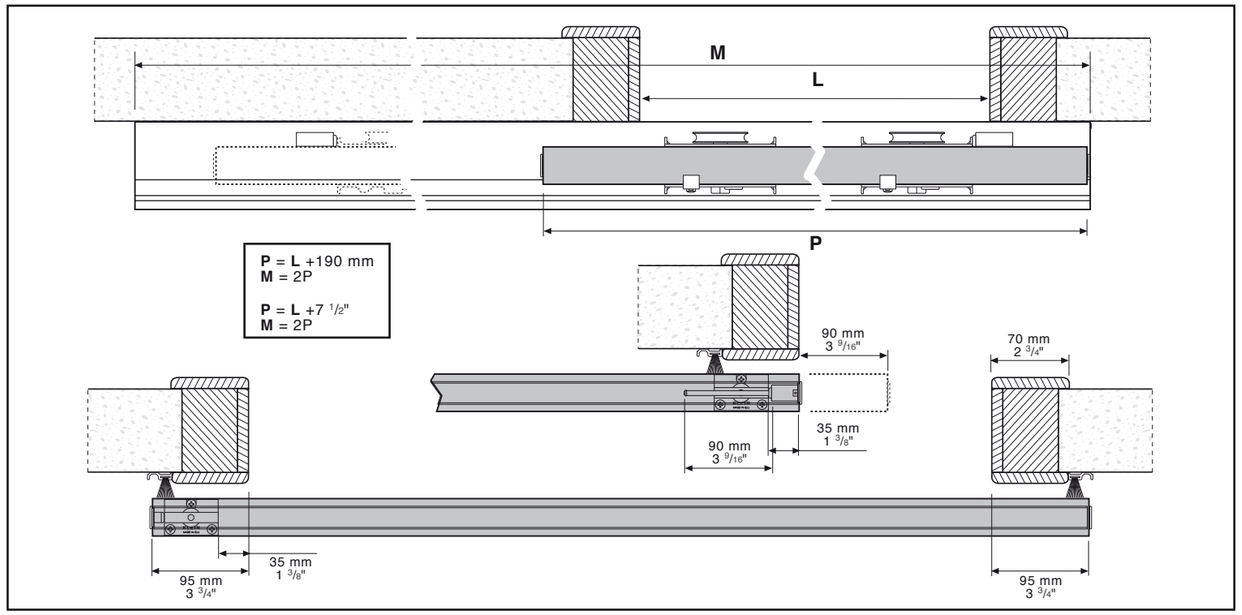
M
L
P
P = L +190 mm
M = 2P
P = L +7 1/2"
M = 2P
90 mm
3 9/16"
70 mm
2 3/4"
35 mm
1 3/8"
90 mm
3 9/16"
35 mm
1 3/8"
95 mm
3 3/4"
95 mm
3 3/4"

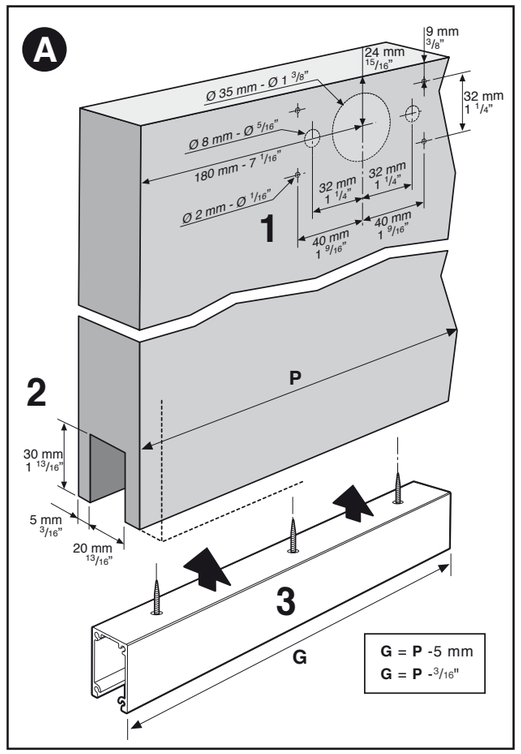
A
9 mm
3/8"
24 mm
15/16"
Ø 35 mm - Ø 1 3/8"
32 mm
1 1/4"
Ø 8 mm - Ø 5/16"
180 mm - 7 1/16"
32 mm
1 1/4"
32 mm
1 1/4"
Ø 2 mm - Ø 1/16"
1
40 mm
1 9/16"
40 mm
1 9/16"
2
P
30 mm
1 13/16"
5 mm
3/16"
20 mm
13/16"
3
G
G = P -5 mm
G = P -3/16"

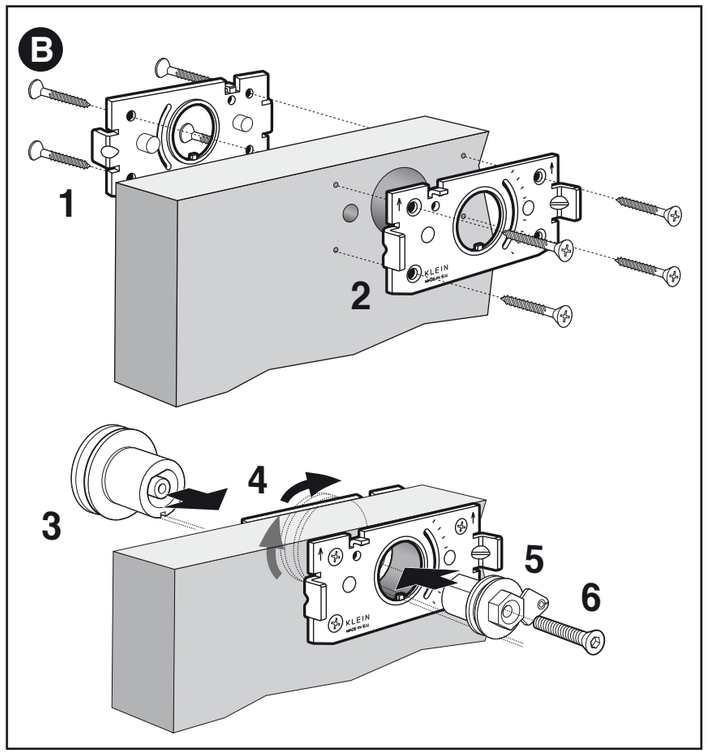
B
1
2
3
4
5
6

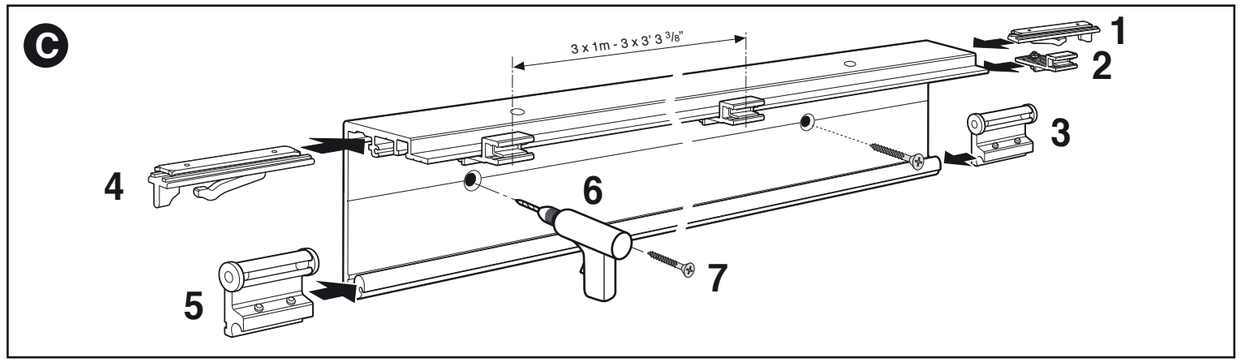
C
3 x 1m - 3 x 3' 3 3/8"
1
2
3
4
5
6
7

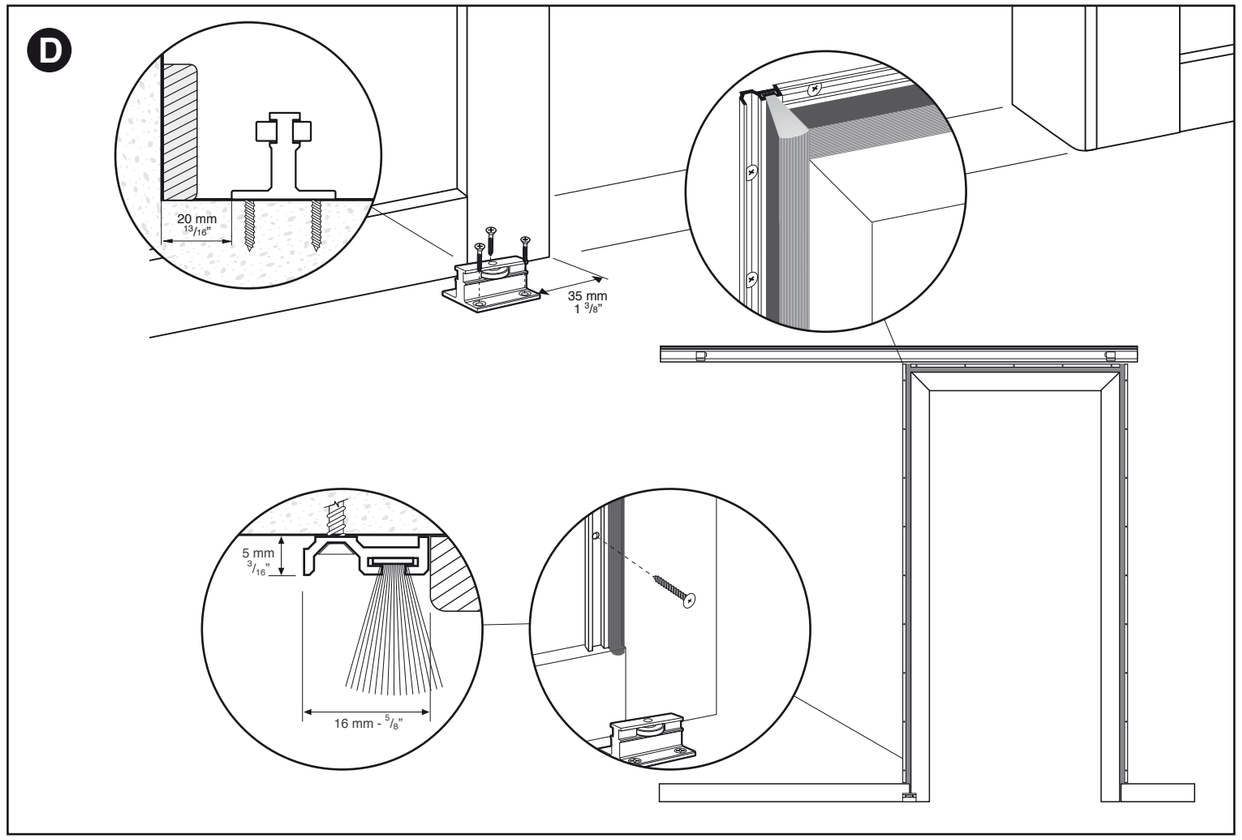
D
20 mm
13/16"
35 mm
1 3/8"
5 mm
3/16"
16 mm - 5/8"

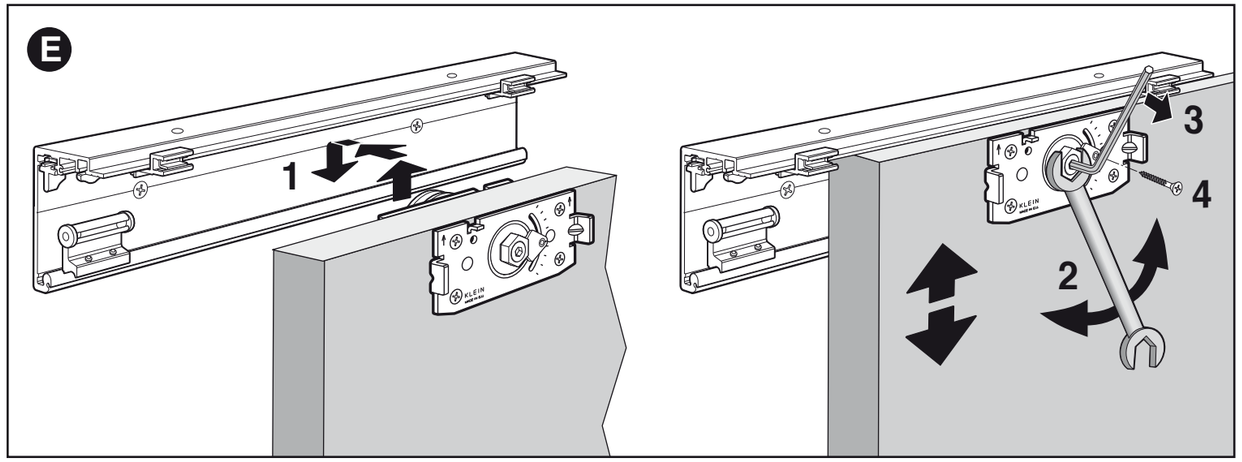
E
1
2
3
4

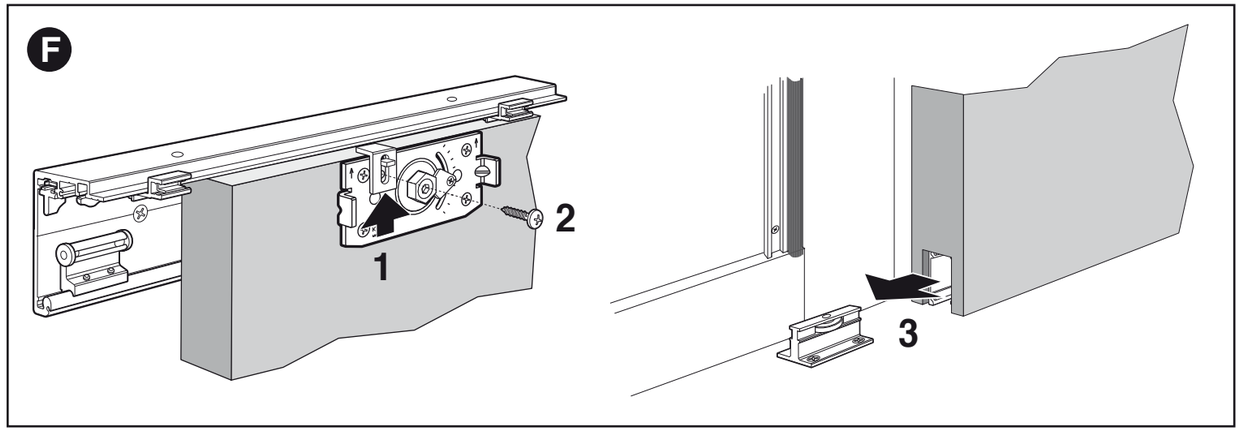
F
1
2
3