KLEIN®

Instrucciones / Instructions / Anweisungen / Instructions

EXTENDO® 4

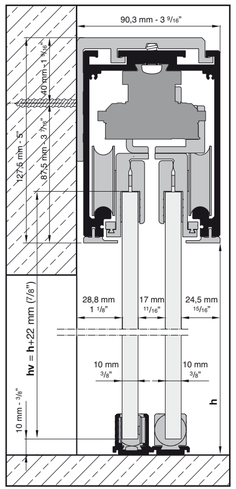

Instal. lateral

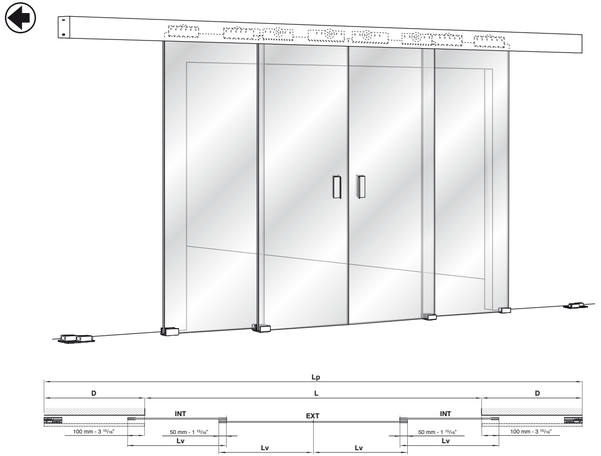

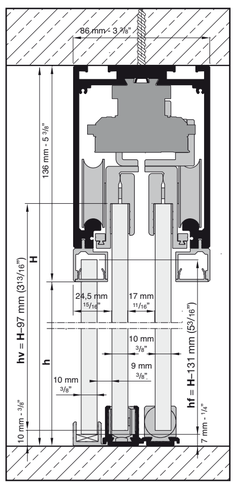

Instal. superior

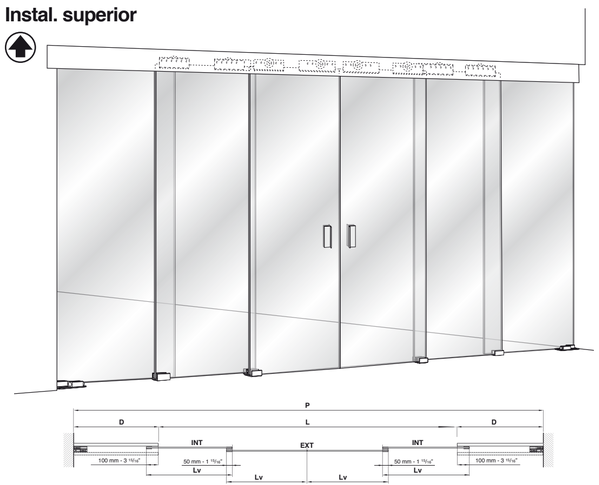

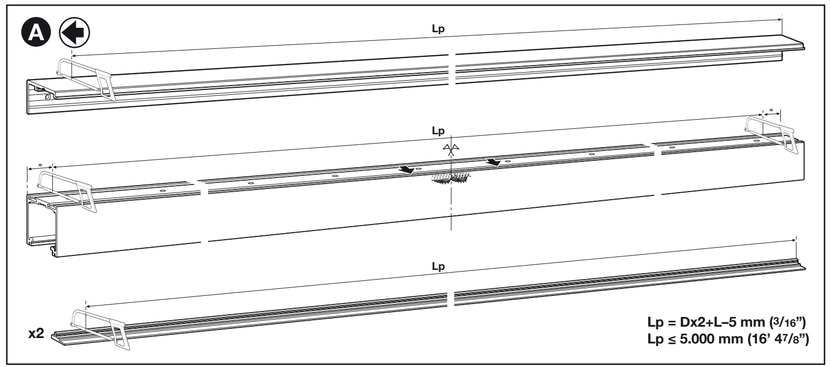

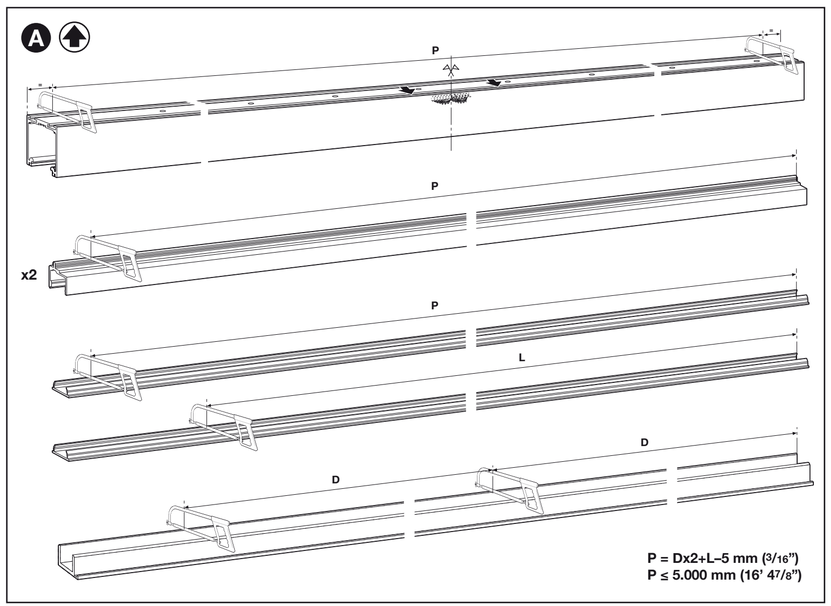

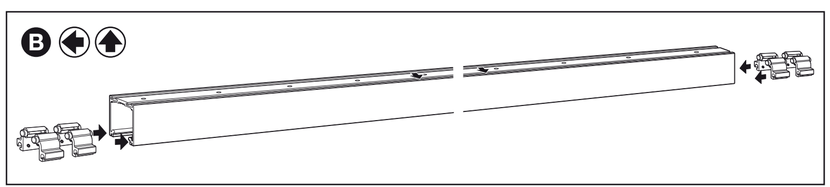

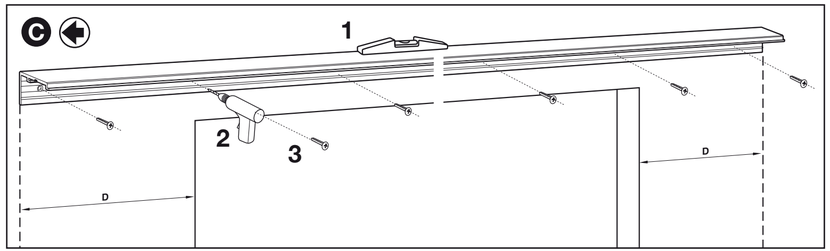

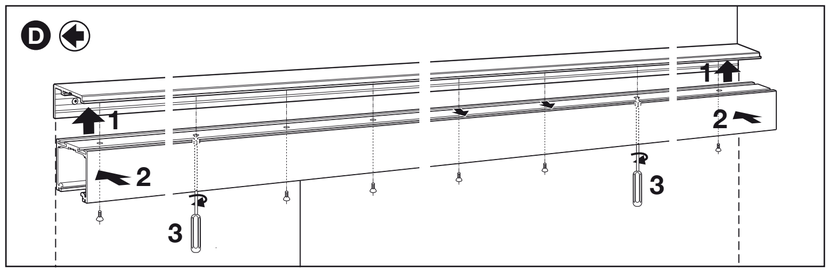

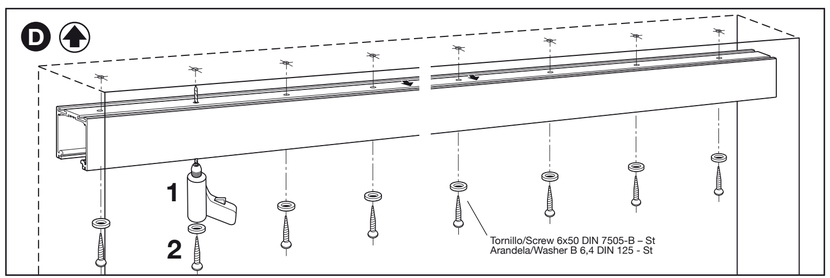

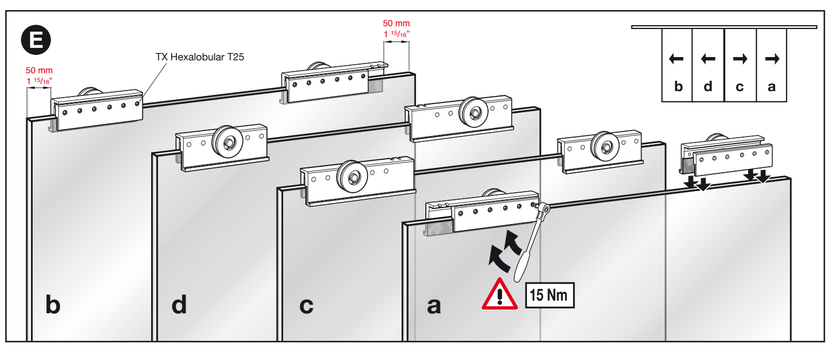

KLEIN®
KLEIN EUROPE - Edificio KLEIN - Polígono Industrial Can Cuyàs, N-150 Km.1
08110 Montcada i Reixac (Barcelona-Spain)
Tel.: (+34) 935 751 010 - Fax: (+34) 935 760 109
+INFO: **www.klein-europe.com**

411-1641 05-11 PK-17

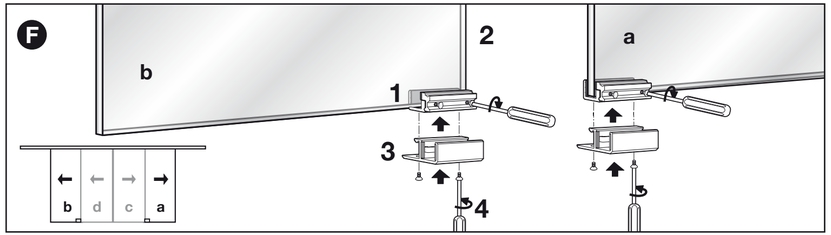
F
b
2
a
1
3
4
b d c a

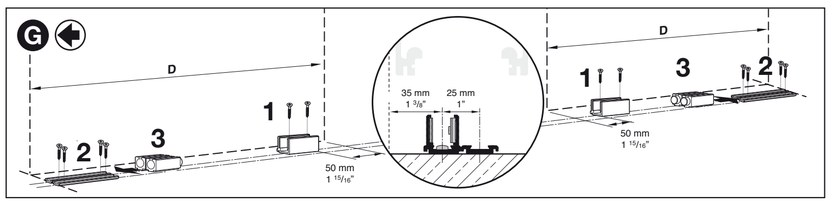
G
D
1
2
3
35 mm
1 3/8"
25 mm
1"
50 mm
1 15/16"

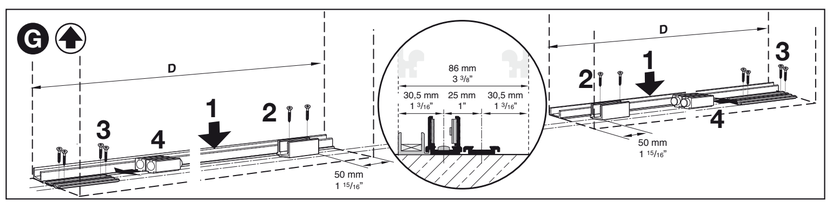
G
D
1
2
3
4
86 mm
3 3/8"
30,5 mm
1 3/16"
25 mm
1"
30,5 mm
1 3/16"
50 mm
1 15/16"

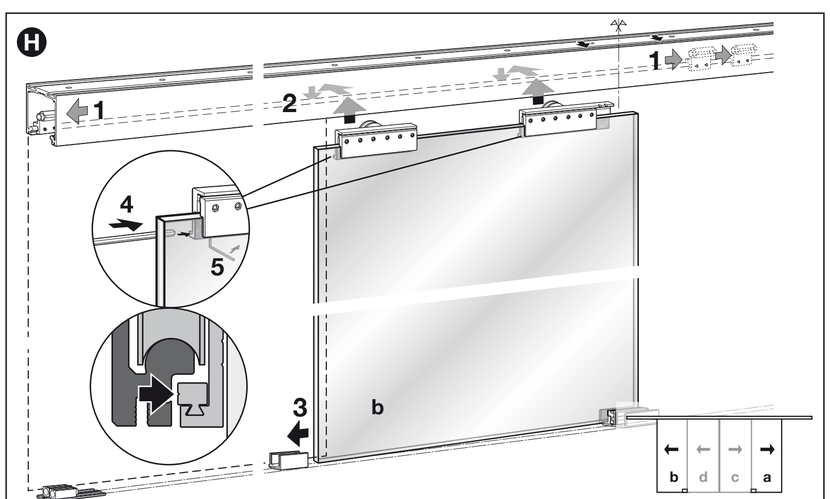
H
1
2
3
4
5
b
b d c a

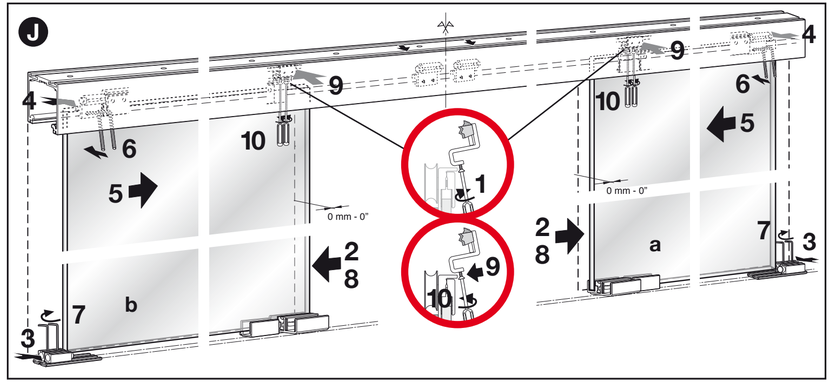
J
1
2
3
4
5
6
7
8
9
10
a
b
0 mm - 0"

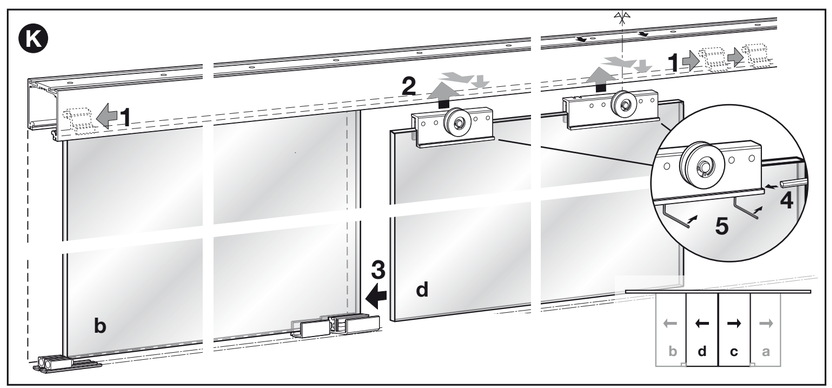
K
1
2
3
4
5
b
d
b d c a

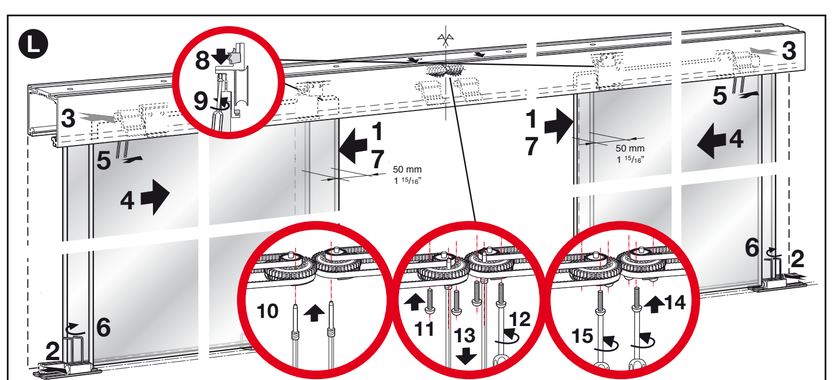
L
1
2
3
4
5
6
7
8
9
10
11
12
13
14
15
50 mm
1 15/16"

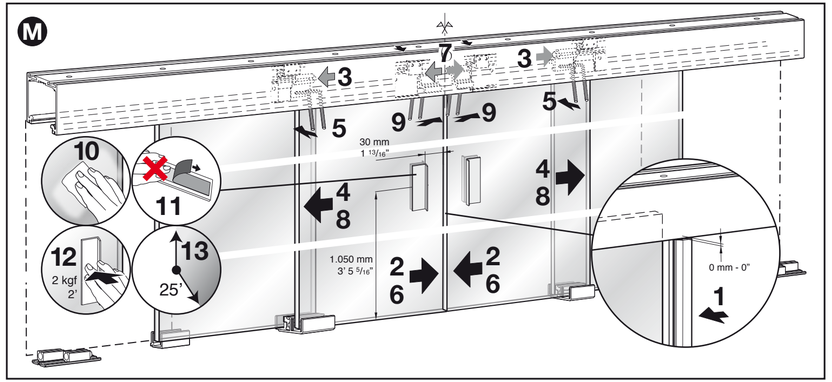
M
1
2
3
4
5
6
7
8
9
10
11
12
13
30 mm
1 13/16"
1.050 mm
3' 5 5/16"
2 kgf
2'
25'
0 mm - 0"

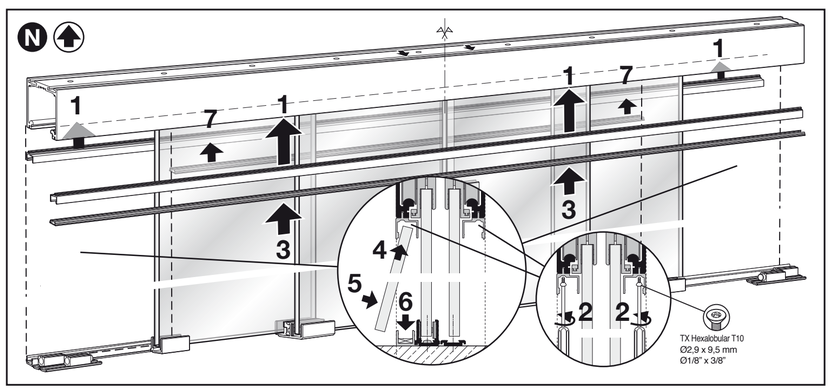
N
1
2
3
4
5
6
7
TX Hexalobular T10
Ø2,9 x 9,5 mm
Ø1/8" x 3/8"

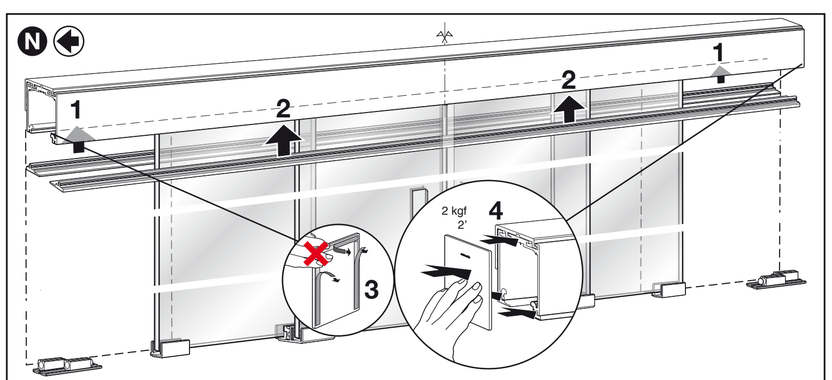
N
1
2
3
4
2 kgf
2'